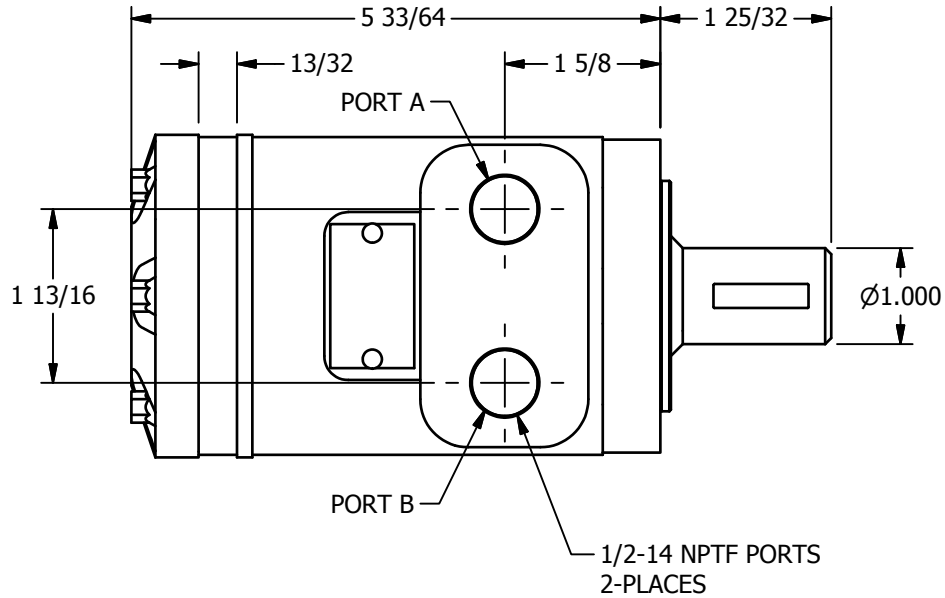

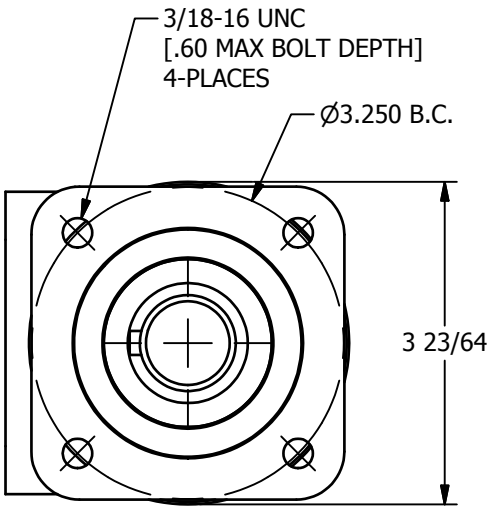

PRESSURIZING PORT B WILL ROTATE THE
SHAFT COUNTER-CLOCKWISE.
(PRESSURIZE PORT A FOR CLOCKWISE)

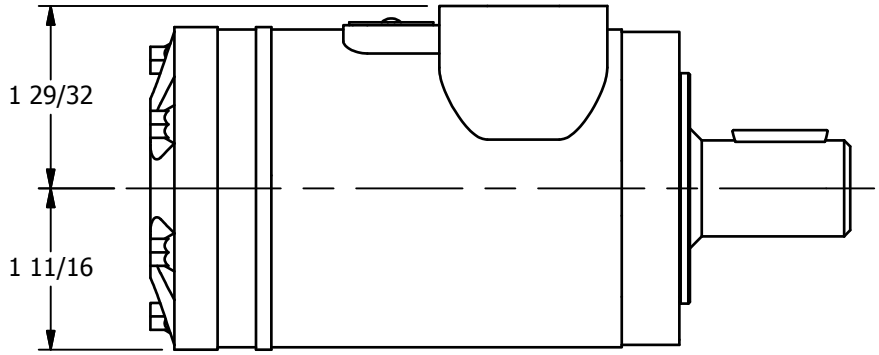

AAA PRODUCTS INTERNATIONAL
7114 Harry Hines Blvd
Dallas, TX 75235

TITLE: B-SERIES MOTOR ASSEMBLY, 4.5 CU. IN. PER REV., JIFFY TAP & DRILL

DRAWING NO.: DIM_B-2

THE INFORMATION CONTAINED WITHIN THIS DOCUMENT IS PROPRIETARY TO AAA PRODUCTS AND MAY NOT BE DISCLOSED WITHOUT PRIOR WRITTEN CONSENT