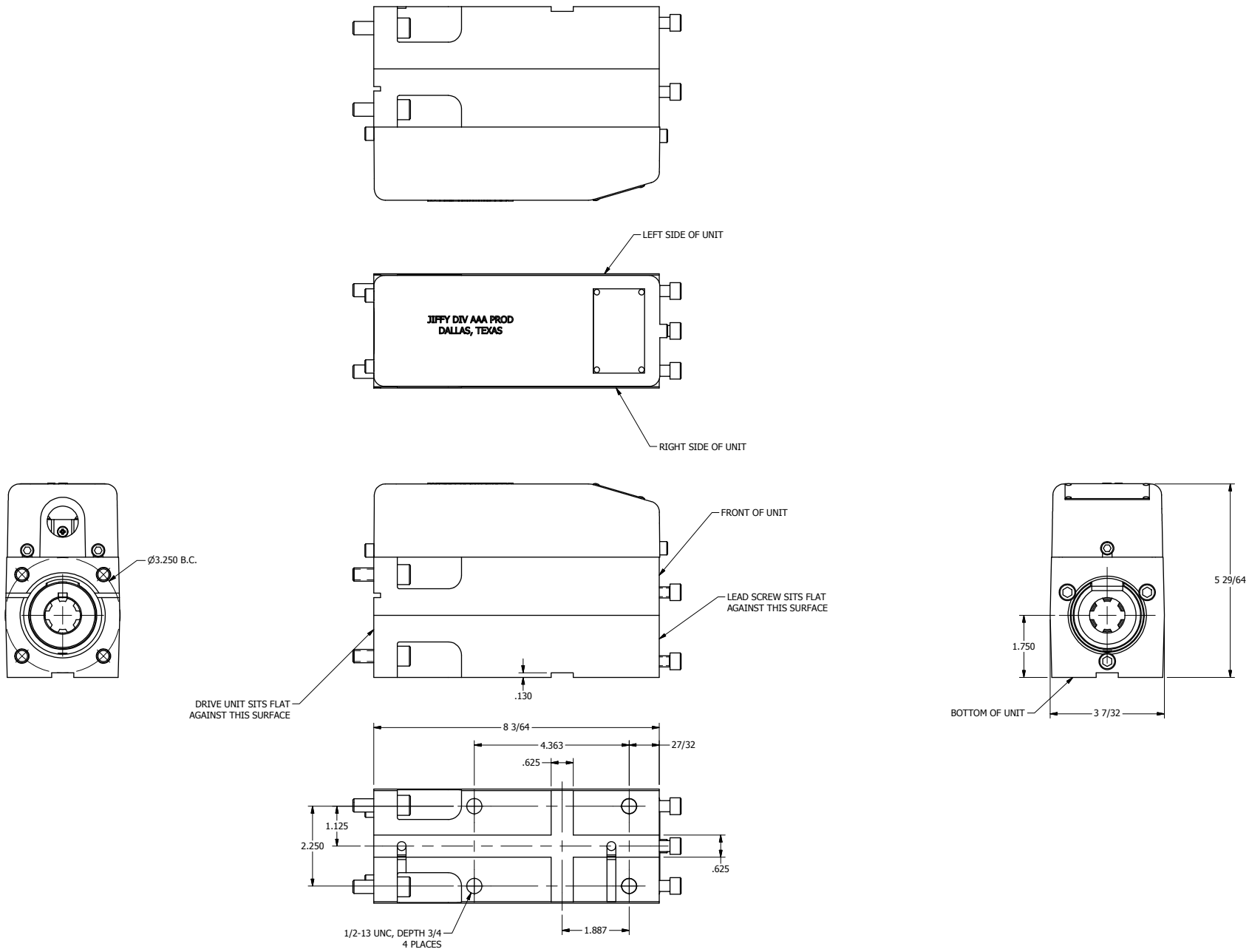

AAA PRODUCTS INTERNATIONAL

AAA PRODUCTS INTERNATIONAL
7114 Harry Hines Blvd
Dallas, TX 75235

TITLE: MAIN TAP UNIT SECTION, USED W/SPINDLE & MOTOR SECTION

DRAWING NO.: DIM_3T

THE INFORMATION CONTAINED WITHIN THIS DOCUMENT IS PROPRIETARY TO AAA PRODUCTS AND MAY NOT BE DISCLOSED WITHOUT PRIOR WRITTEN CONSENT