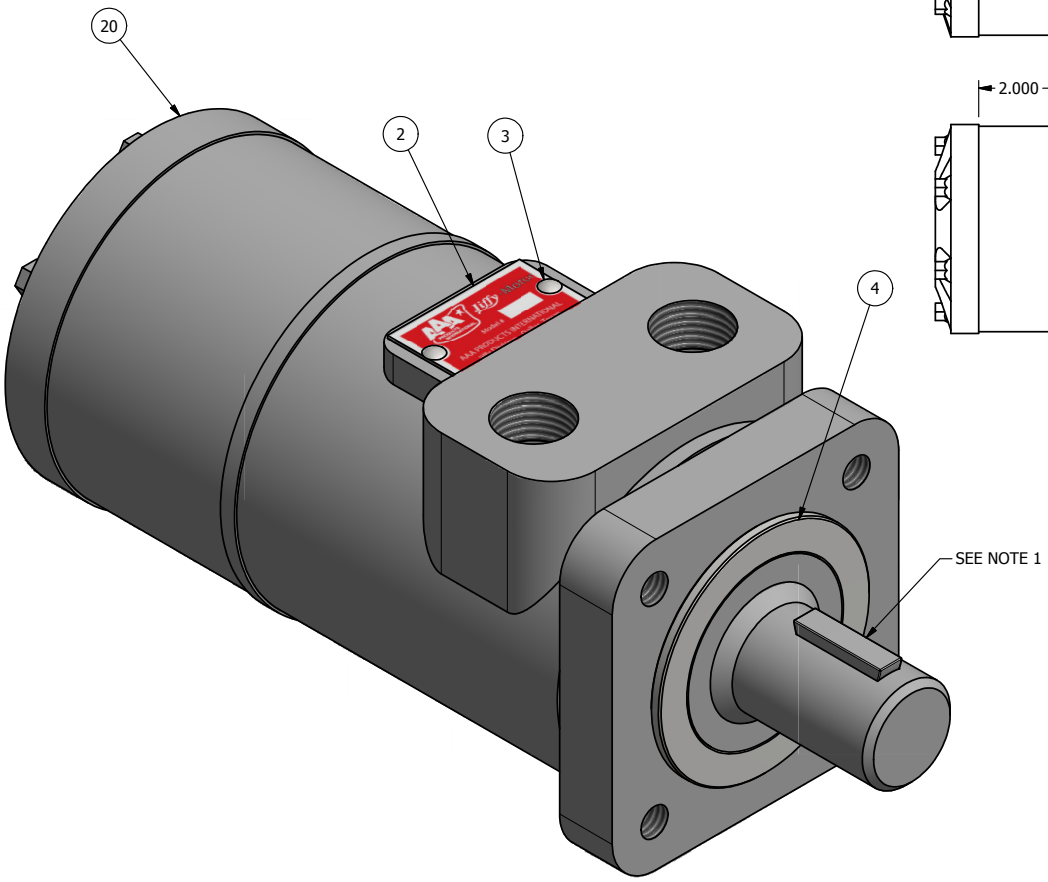

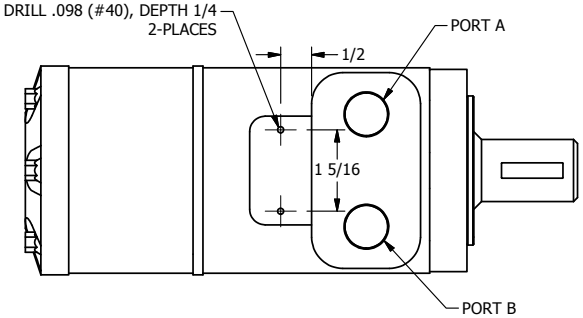

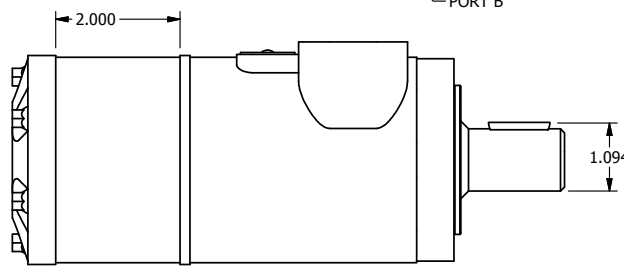

STANDARD ROTATION
PORT A PRESSURIZED - CW
PORT B PRESSURIZED - CCW
STD DRILLS USE CCW

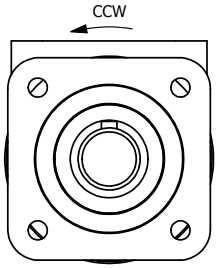

NOTES:
1) MOTORS COME WITH A J-310 KEY.

FLG	QTY	PART NO	DESCRIPTION
4	1	J-5307	RING - CHAR LYNN ADAPTOR, JIFFY TAP
3	2	J-281	SCREW DRIVE #4 X 1/4" ROUND HEAD 18-8 SS.
2	1	J-289	NAMEPLATE, HYD MOTOR
1	1	B-8-R	MOTOR, CHAR-LYNN SERIES H 101-1008-009 (2 GEROTOR)

LIMITS ON DIMENSIONS UNLESS OTHERWISE SPECIFIED
2-PL DECIMAL ± .01
3-PL DECIMAL ± .005
FRACTIONAL ± 1/64
ANGULAR ± 1/2'

AAA PRODUCTS INTERNATIONAL
7114 Harry Hines Blvd
Dallas, TX 75235

DRAWN: RMcKenna	DATE: 8/5/2012	CHECKED: KWaite	DATE: 10/9/2012
SCALE: None	SHEET: 1 OF 1	RELEASED: HWomack	DATE: 10/9/2012

TITLE:
B-SERIES MOTOR ASSEMBLY,
22.6 CU. IN. PER REV.,
JIFFY TAP & DRILL

PART NO.: B-8

REV.:

THE INFORMATION CONTAINED WITHIN THIS DOCUMENT IS PROPRIETARY TO AAA PRODUCTS AND MAY NOT BE DISCLOSED WITHOUT PRIOR WRITTEN CONSENT

D:\Engineering\Inventor Files\Internal Drawings\Jiffy\Motor\B-8.idw